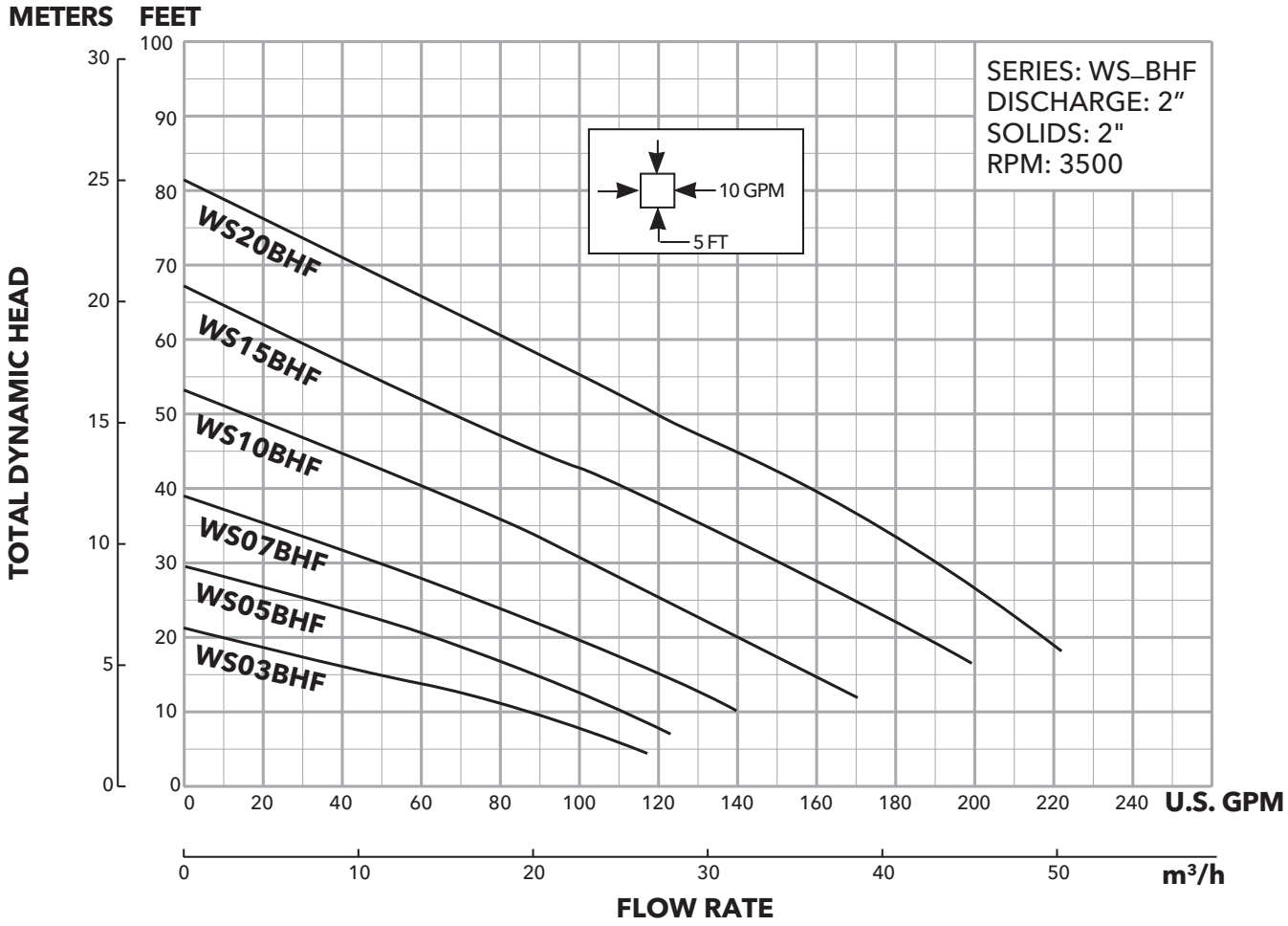

DIMENSIONS

(All dimensions are in inches. Do not use for construction purposes.)

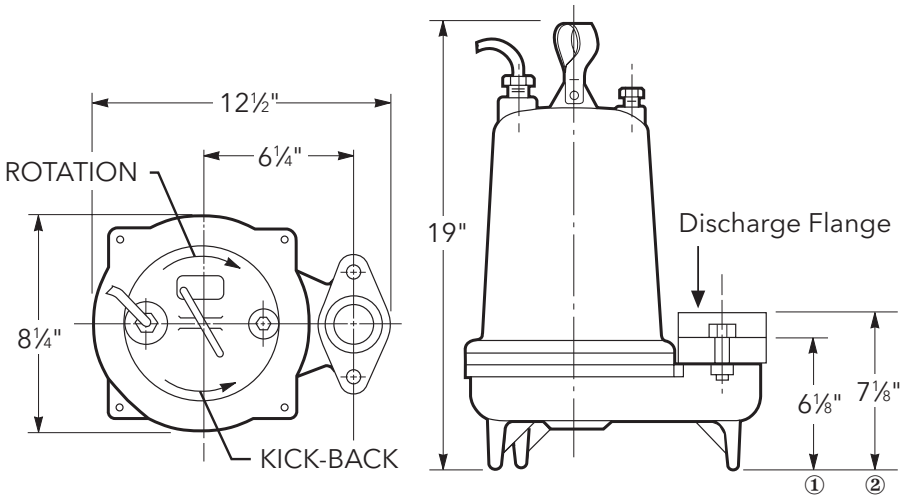

Discharge Flange:

① 2" NPT standard

② 3" NPT optional (order an A1-3)