MODELS 3886, 3887 (WS_B, WS_BF, WS_BHF)

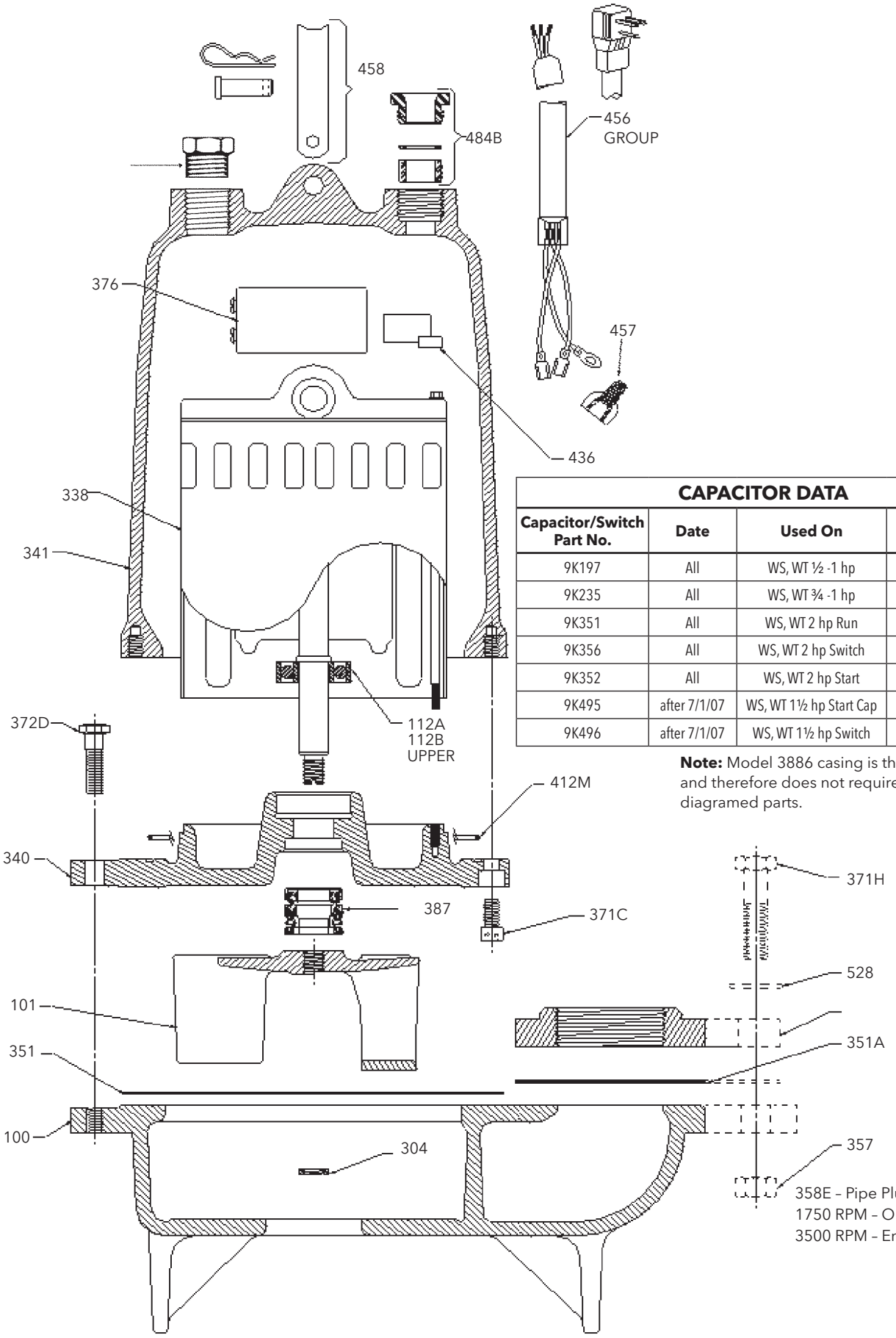

CAPACITOR DATA

Capacitor/Switch Part No.	Date	Used On	MFD	VAC
9K197	All	WS, WT ½ -1 hp	161/193	110
9K235	All	WS, WT ¾ -1 hp	189/227	110
9K351	All	WS, WT 2 hp Run	30	370
9K356	All	WS, WT 2 hp Switch	–	–
9K352	All	WS, WT 2 hp Start	200/240	220
9K495	after 7/1/07	WS, WT 1½ hp Start Cap	275	125
9K496	after 7/1/07	WS, WT 1½ hp Switch	–	–

Note: Model 3886 casing is threaded 2" NPT and therefore does not require some of the diagramed parts.